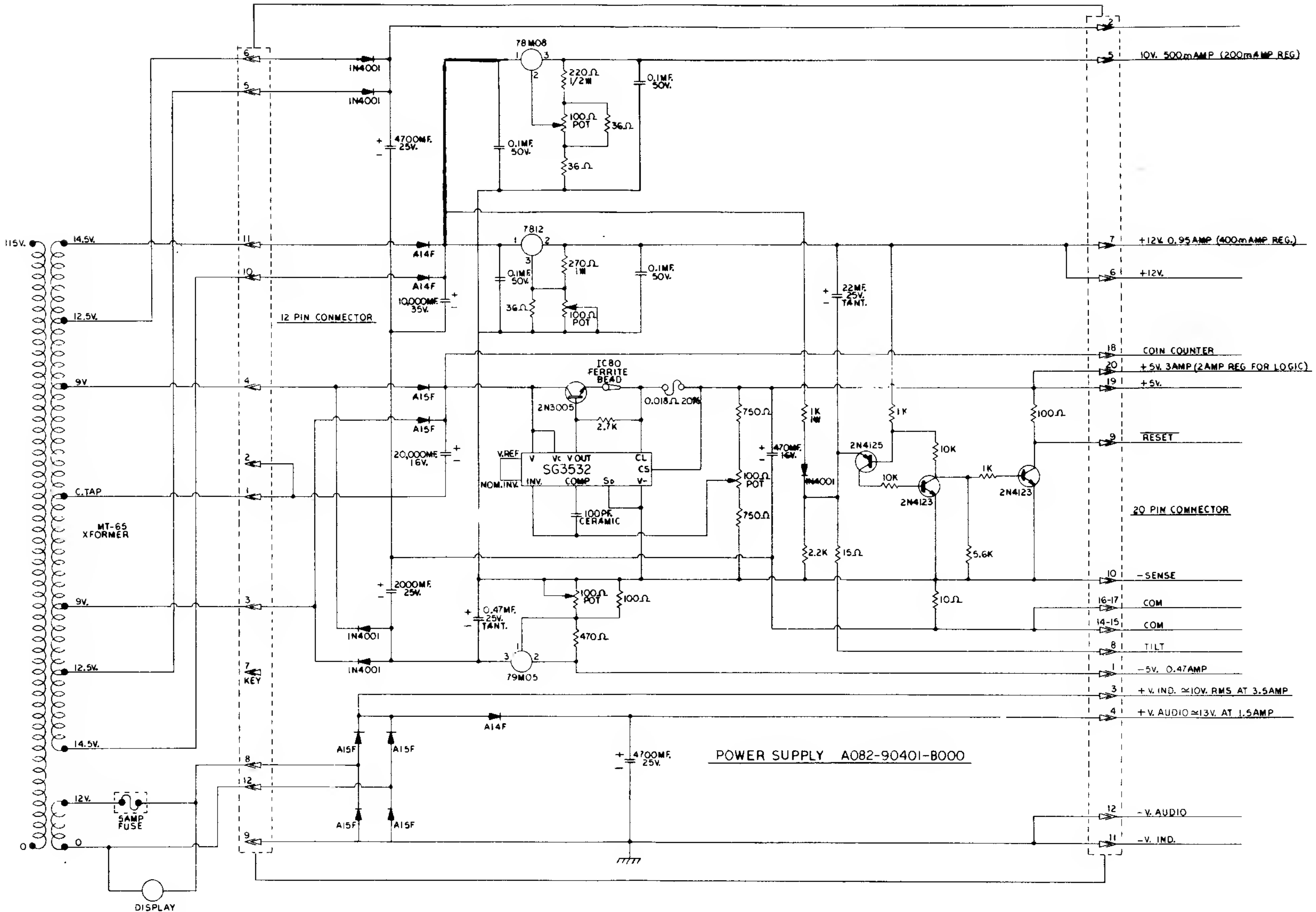
115V.
0
14.5V.
12.5V.
9V
C.TAP
MT-65
XFORMER
9V.
12.5V.
14.5V.
12V.
0
5AMP
FUSE
DISPLAY
LITES
12 PIN CONNECTOR
KEY
1N4001
A14F
A15F
4700MF.
25V.
10,000MF.
35V.
20,000MF.
16V.
2000MF.
25V.
78M08
220Ω
1/2W
100Ω
POT
36Ω
0.1MF.
50V.
7812
270Ω
1W
IC80
FERRITE
BEAD
2N3005
2.7K
0.018Ω 20%
V.REF
V
Vc
VOUT
CL
CS
V-
SG3532
NOM.INV.
INV.
COMP
Sb
100PF.
CERAMIC
750Ω
1K
1W
470MF.
16V.
22MF.
25V.
TANT.
2.2K
15Ω
2N4125
10K
2N4123
1K
100Ω
5.6K
10Ω
0.47MF.
25V.
TANT.
470Ω
79M05
20 PIN CONNECTOR
10V. 500mAMP (200mAMP REG)
+12V. 0.95AMP (400mAMP REG.)
+12V.
COIN COUNTER
+5V. 3AMP (2AMP REG FOR LOGIC)
+5V.
RESET
-SENSE
COM
COM
TILT
-5V. 0.47AMP
+V. IND. ≈10V. RMS AT 3.5AMP
+V. AUDIO ≈13V. AT 1.5AMP
-V. AUDIO
-V. IND.
16-17
14-15

POWER SUPPLY A082-90401-B000

NOTES: ⏚ IS COMMON CENTER TAP
⫨ IS SPECIAL GROUND AND CAN BE CONNECTED TO COMMON CIRCUITS
POWER SUPPLY TO BE USED WITH MOTHER BOARD P. C. A082-90002-X000

"SEA WOLF II"

MIDWAY MFG. CO.
10750 W. GRAND AVE.
FRANKLIN PARK, IL. 60131
6-1-78

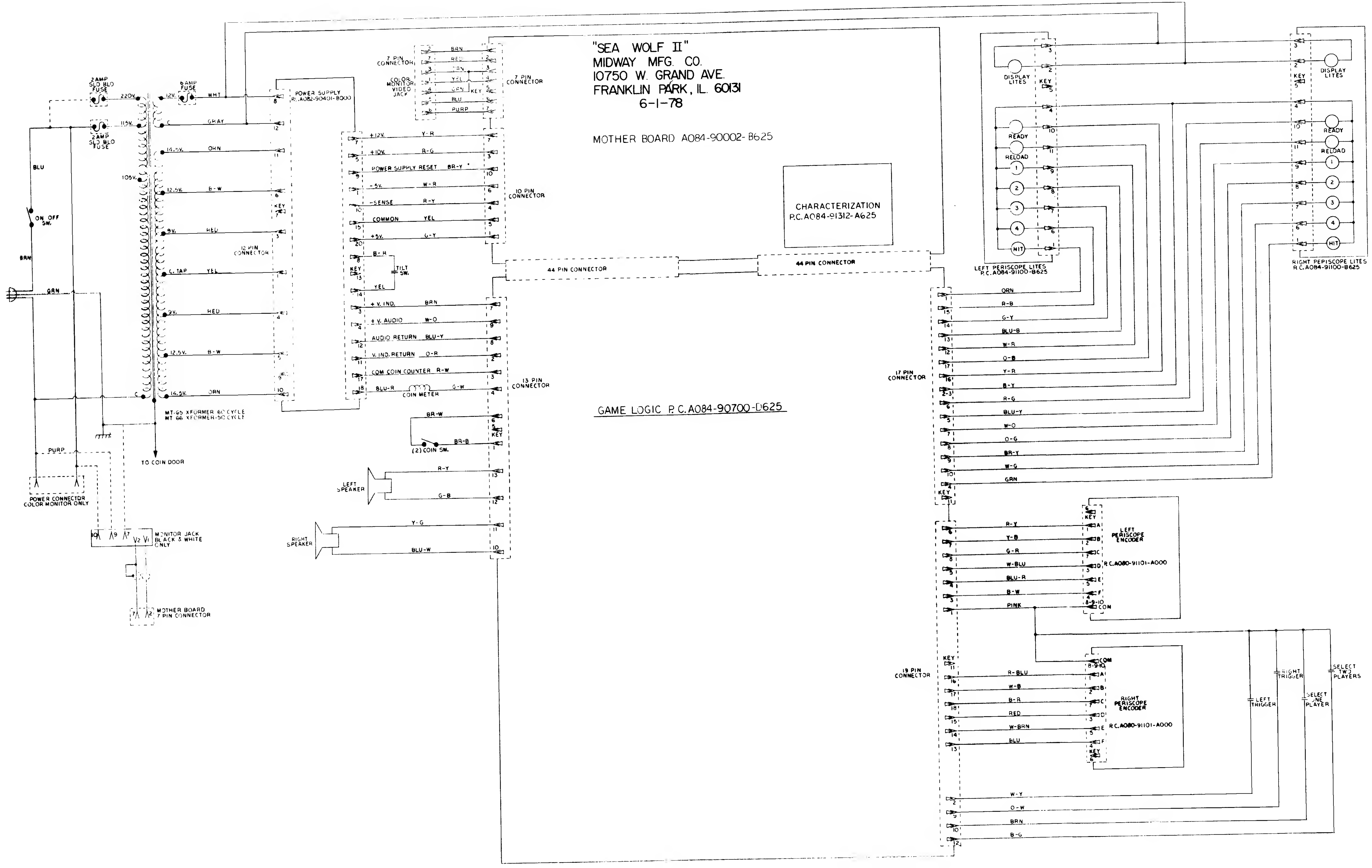
MOTHER BOARD A084-90002-B625
CHARACTERIZATION P.C. A084-91312-A625
GAME LOGIC P.C. A084-90700-D625
2 AMP SLO BLO FUSE
220V.
115V.
2 AMP SLO BLO FUSE
6 AMP FUSE
12V.
WHT
C
GRAY
14.5V.
ORN
105V.
12.5V.
B-W
9V.
RED
C. TAP
YEL
9V.
RED
12.5V.
B-W
14.5V.
ORN
C
BLU
ON OFF SW.
BRN
GRN
PURP
POWER CONNECTOR COLOR MONITOR ONLY
MT-65 XFORMER 60 CYCLE
MT 66 XFORMER-50 CYCLE
TO COIN DOOR
MONITOR JACK BLACK & WHITE ONLY
V2 V1
MOTHER BOARD 7 PIN CONNECTOR
POWER SUPPLY P.C. A082-90401-B000
12 PIN CONNECTOR
KEY
7 PIN CONNECTOR
COLOR MONITOR VIDEO JACK
BRN
RED
BRN
YEL
GRN
KEY
BLU
PURP
7 PIN CONNECTOR
+12V. Y-R
+10V. R-G
POWER SUPPLY RESET BR-Y
-5V. W-R
-SENSE R-Y
COMMON YEL
+5V. G-Y
10 PIN CONNECTOR
B-R
KEY
TILT SW.
YEL
+ V. IND. BRN
+ V. AUDIO W-O
AUDIO RETURN BLU-Y
V. IND. RETURN O-R
COM COIN COUNTER R-W
BLU-R
COIN METER
G-W
13 PIN CONNECTOR
BR-W
KEY
(2) COIN SW.
BR-B
LEFT SPEAKER
R-Y
G-B
RIGHT SPEAKER
Y-G
BLU-W
44 PIN CONNECTOR
44 PIN CONNECTOR
DISPLAY LITES
KEY
READY
RELOAD
HIT
LEFT PERISCOPE LITES P.C. A084-91100-B625
DISPLAY LITES
KEY
READY
RELOAD
HIT
RIGHT PEPISCOPE LITES R.C. A084-91100-B625
17 PIN CONNECTOR
ORN
R-B
G-Y
BLU-B
W-R
O-B
Y-R
B-Y
R-G
BLU-Y
W-O
O-G
BR-Y
W-G
GRN
KEY
R-Y
Y-B
G-R
W-BLU
BLU-R
B-W
PINK
KEY
LEFT PERISCOPE ENCODER
R.C. A080-91101-A000
8-9-10 CON
19 PIN CONNECTOR
KEY
COM 8-9-10
R-BLU
W-B
B-R
RED
W-BRN
BLU
RIGHT PERISCOPE ENCODER
R.C. A080-91101-A000
KEY
LEFT TRIGGER
RIGHT TRIGGER
SELECT ONE PLAYER
SELECT TWO PLAYERS
W-Y
O-W
BRN
B-G

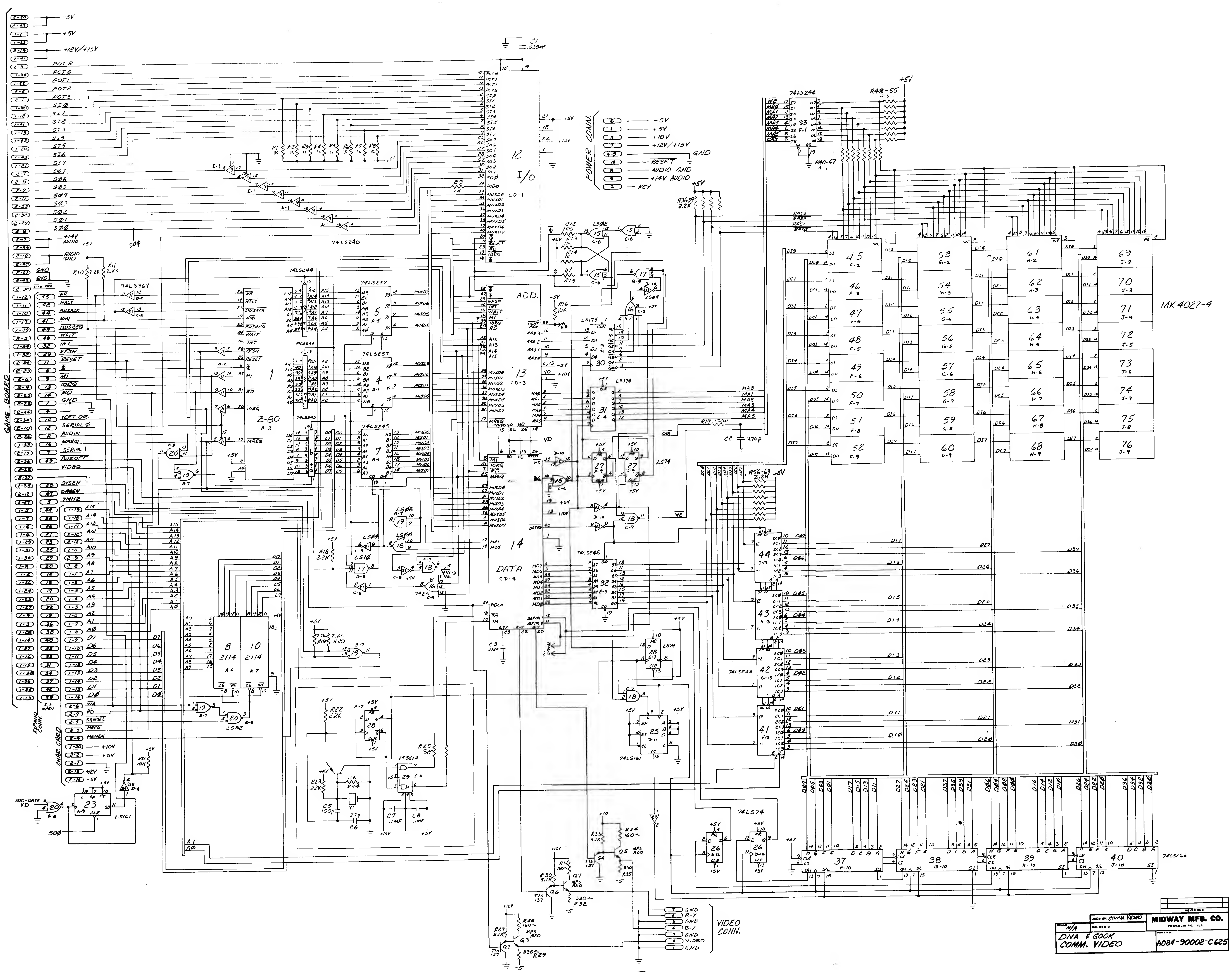

-5V
+5V
+12V/+15V
POT R
POT Ø
POT 1
POT 2
POT 3
SI Ø
SI 1
SI 2
SI 3
SI 4
SI 5
SI 6
SI 7
SØ7
SØ6
SØ5
SØ4
SØ3
SØ2
SØ1
SØØ
+14V AUDIO
AUDIO GND
GND
LITE PEN
WR
HALT
BUSACK
NMI
BUSREQ
WAIT
INT
RFSH
RESET
MI
IORQ
RD
VERT. DR.
SERIAL Ø
AUDIN
MREQ
SERIAL 1
BUZOFF
VIDEO
SYSEN
DAREN
7MHZ
A15
A14
A13
A12
A11
A10
A9
A8
A7
A6
A5
A4
A3
A2
A1
AØ
D7
D6
D5
D4
D3
D2
D1
DØ
RAMSEL
MENEN
+10V
+12V
GAME BOARD
EXPAND CONN.
CHAR. CARD
C1 .039MF
12
I/O
CD-1
74LS240
R1–R8 1K
R9 1K
R10 2.2K
R11 2.2K
74LS367
74LS244
74LS257
74LS245
Z-80
A-3
1
5
4
7
13
ADD.
CD-3
14
DATA
CD-4
LS02
LS175
LS174
LS74
LS00
LS04
LS08
LS10
7425
LS32
2114
8
10
R12 50
R13 1K
R14 1K
R15
R16 10K
R17 100Ω
C2 270P
R18 2.2K
R19 2.2K
R20 2.2K
R21 10K
R22 2.2K
R23 22K
R24 1K
R25 82K
C5 100P
C6 27P
C7 .1MF
C8 .1MF
C9 .1MF
Y1
75361A
LS161
74LS161
74LS253
74LS166
74LS244
R48-55
R40-47
R36-39 2.2K
R56-63 2.2K
RAS3
RAS2
RAS1
RASØ
CAS
WE
MAØ
MA1
MA2
MA3
MA4
MA5
45 F-2
46 F-3
47 F-4
48 F-5
49 F-6
50 F-7
51 F-8
52 F-9
53 G-2
54 G-3
55 G-4
56 G-5
57 G-6
58 G-7
59 G-8
60 G-9
61 H-2
62 H-3
63 H-4
64 H-5
65 H-6
66 H-7
67 H-8
68 H-9
69 J-2
70 J-3
71 J-4
72 J-5
73 J-6
74 J-7
75 J-8
76 J-9
MK4027-4
44 J-13
43 H-13
42 G-13
41 F-13
37 F-10
38 G-10
39 H-10
40 J-10
POWER CONN.
-5V
+5V
+10V
+12V/+15V
GND
RESET
AUDIO GND
+14V AUDIO
KEY
VIDEO CONN.
GND
R-Y
GND
B-Y
GND
VIDEO
GND
R26 5.1K
R27 5.1K
R28 160Ω
R29 330Ω
R30 5.1K
R31 160Ω
R32 330Ω
R33 5.1K
R34 160Ω
R35 330
Q2
Q3
Q4
Q5
Q6
Q7
T15 137
MPS A20
ADD-DATA VD
SØØ

REVISIONS

USED ON COMM. VIDEO

MIDWAY MFG. CO.

FRANKLIN PK. ILL.

SCALE N/A

NO. REQ'D

DNA & GOOK
COMM. VIDEO

PART NO.
A084-90002-C625

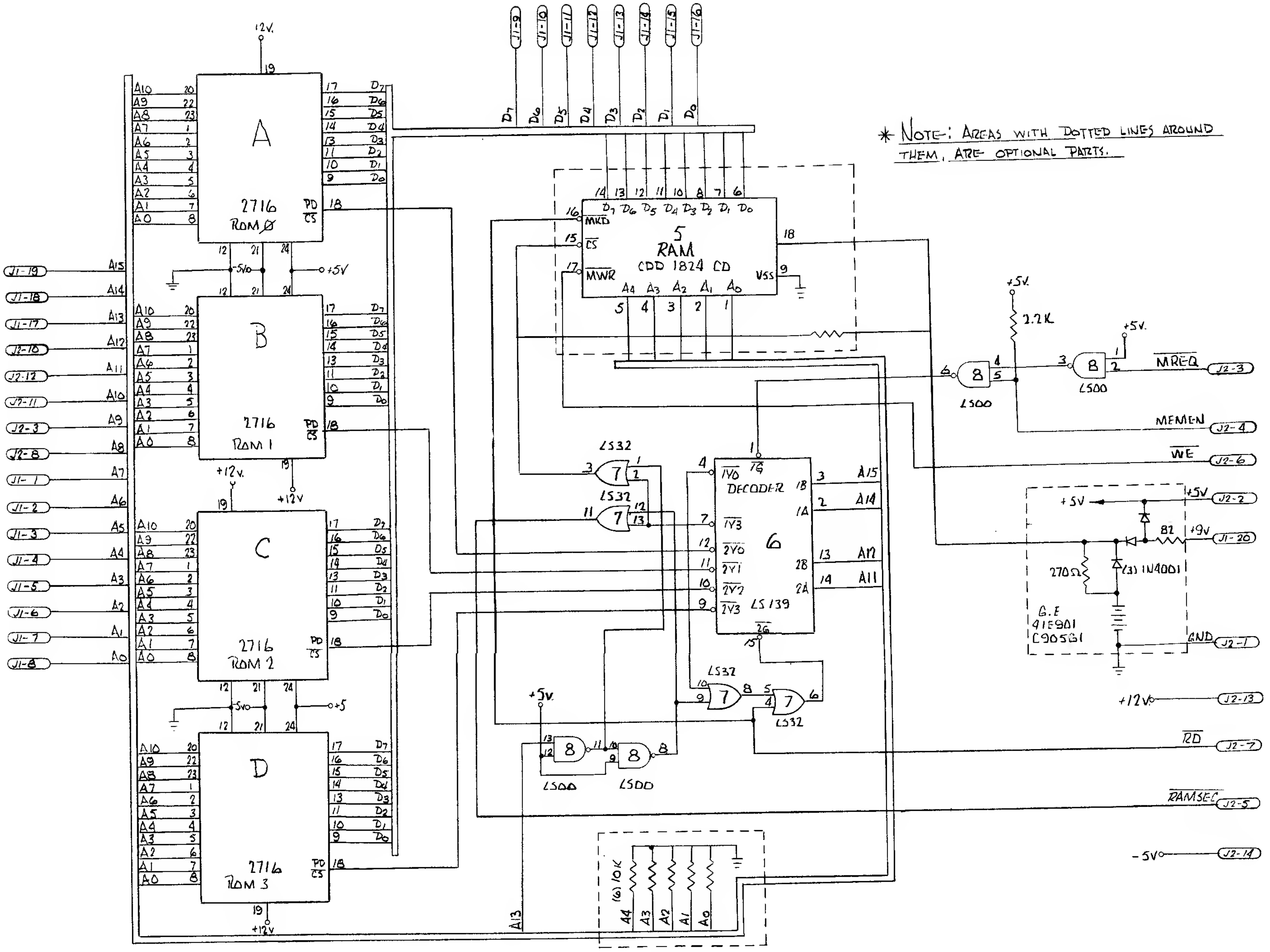

MIDWAY MFG. CO.
10750 W. GRAND AVE.
FRANKLIN PARK, IL. 60131
"SEA WOLF II"
GAME LOGIC SCHEMATIC
P.C. A084-90700-D625
6-1-78

RRC NETWORK
19 PIN CONNECTOR
15 PIN CONNECTOR
COIN
SELECT ONE PLAYER
SELECT TWO PLAYERS
LEFT TRIGGER
RIGHT TRIGGER
DIP SW.
74LS368
74LS138
74LS02
74174
74175
DM81LS95
ULN2003B
4006
4030
NOISE GENERATOR
SONAR CIRCUIT
RIGHT TORPEDO
LEFT TORPEDO
RIGHT SHIP HIT
LEFT SHIP HIT
RIGHT MINE HIT
LEFT MINE
LEFT SUMMER & AMPLIFIER
RIGHT SUMMER & AMPLIFIER
DIVE CIRCUIT
CD4051
LM3900
LM377
TORPEDO 1
TORPEDO 2
TORPEDO 3
TORPEDO 4
READY
RELOAD
HIT
LEFT PLAYER PERISCOPE LITES
17 PIN CONNECTOR
GAME ON
COIN COUNTER
V. IND +
LEFT SPEAKER
COIN
KEY
V. AUDIO RETURN
CENTER TAP
RIGHT SPEAKER
V. AUDIO
LOGIC GROUND
V. IND −
Original didn't have this line
LOGIC GND
12V. DEC.